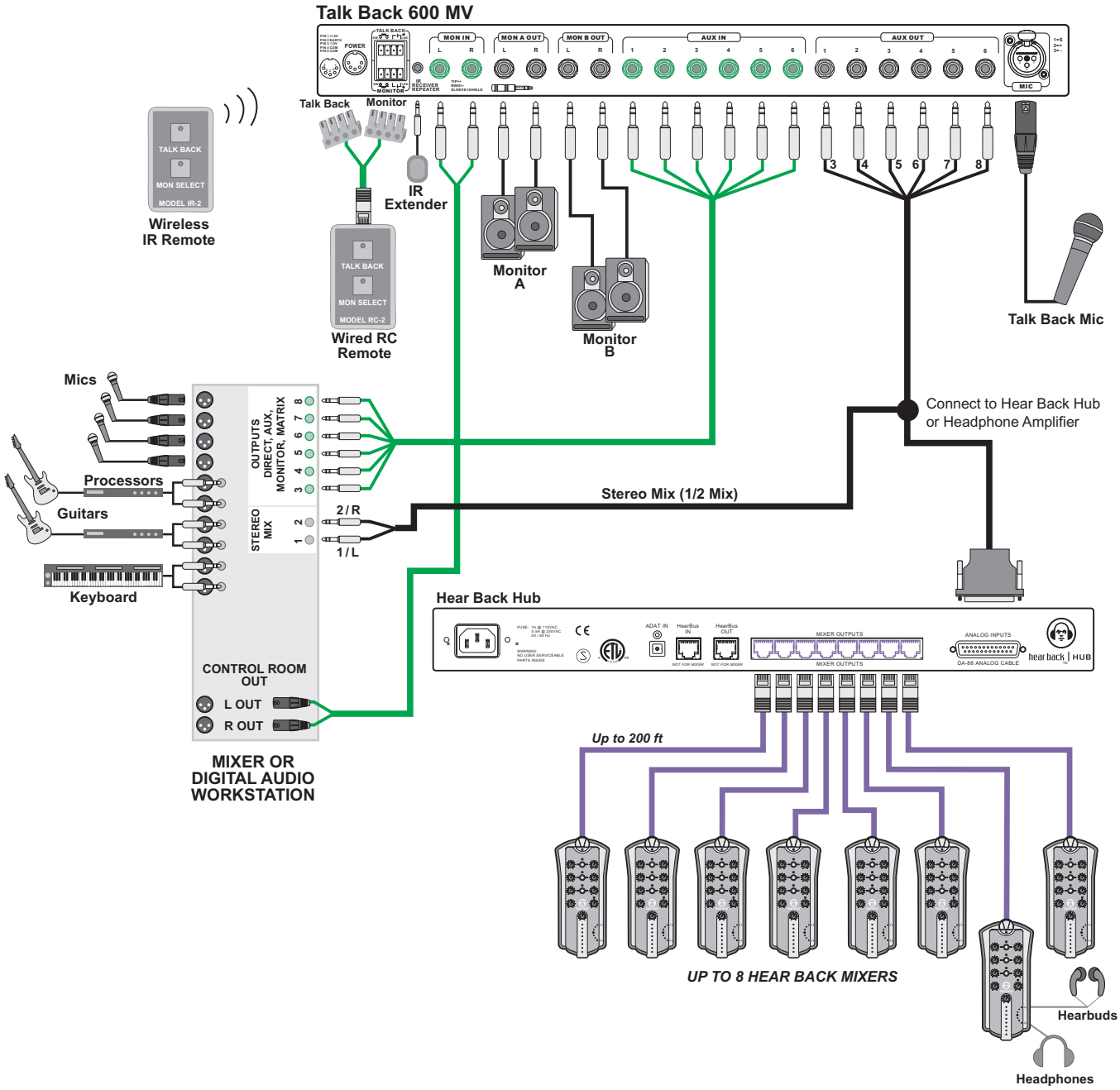
Talk Back 600 MV
MON IN
MON A OUT
MON B OUT
AUX IN
AUX OUT
MIC
Talk Back
Monitor
IR Extender
Wireless IR Remote
TALK BACK
MON SELECT
MODEL IR-2
Wired RC Remote
MODEL RC-2
Monitor A
Monitor B
Talk Back Mic
Mics
Processors
Guitars
Keyboard
OUTPUTS DIRECT, AUX, MONITOR, MATRIX
STEREO MIX
2 / R
1 / L
Connect to Hear Back Hub or Headphone Amplifier
Stereo Mix (1/2 Mix)
Hear Back Hub
MIXER OUTPUTS
ANALOG INPUTS
DA-88 ANALOG CABLE
CONTROL ROOM OUT
L OUT
R OUT
MIXER OR DIGITAL AUDIO WORKSTATION
Up to 200 ft
UP TO 8 HEAR BACK MIXERS
Hearbuds
Headphones